Primelite Manufacturing Corp

407 S Main St, Freeport, NY 11520

Phone: 516-868-4411 | Fax: 516-868-4609

sales@primelite-mfg.com | www.primelite-mfg.com

PART #	LAMP	VOLTAGE	COLOR
#5751/850 LED 100	Built-In LED	120-277 V	Powder Coated Paint
JOB NAME			TYPE: Linear Sign Light

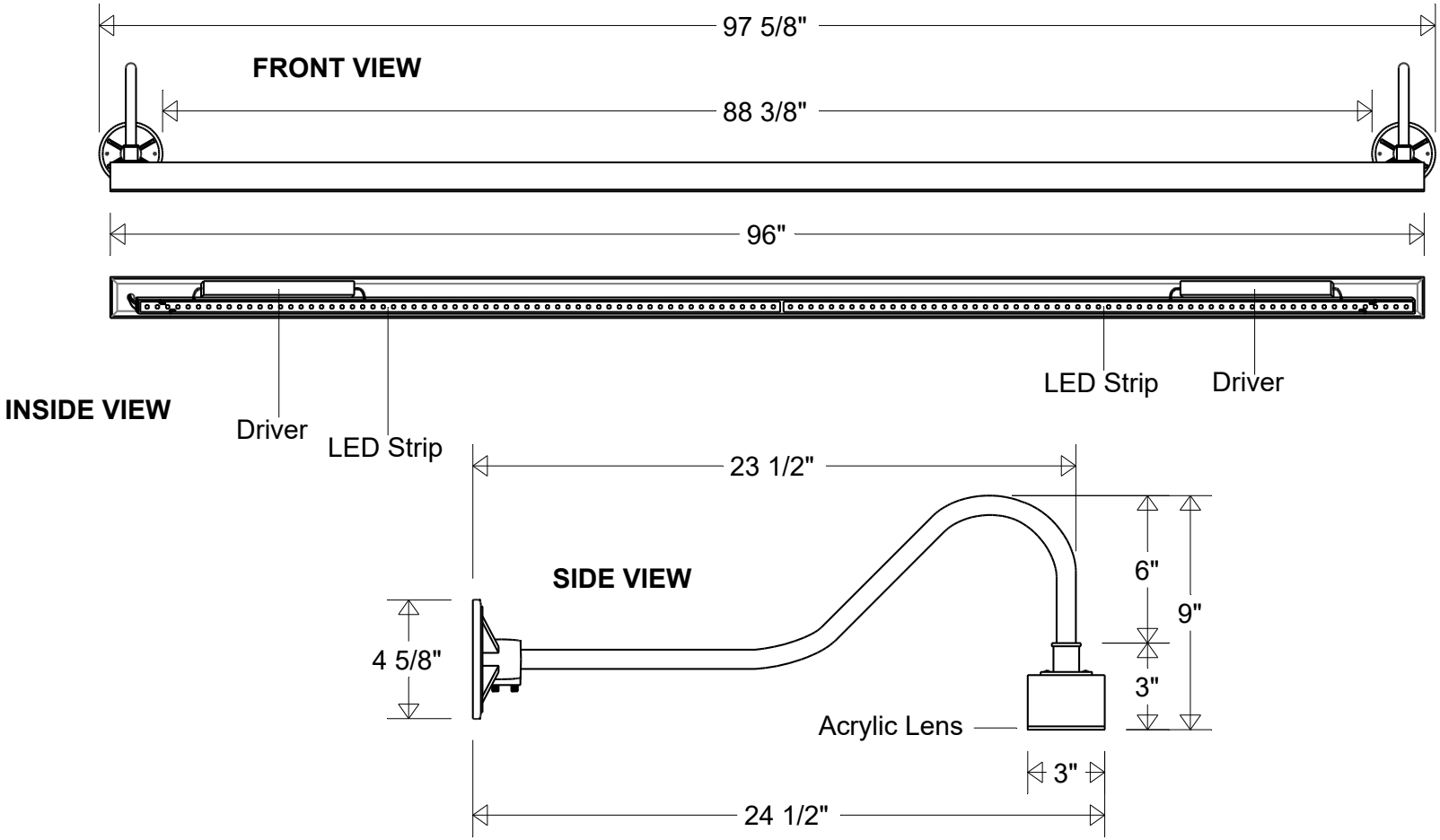

Lamp: LED 100 (2 x LED 50 Strip)
35K or 50K: 14,000 Lumens

Construction: Aluminum | Acrylic

Unless Otherwise Specified:
Dimensions in Inches

	Name	Date
Drawn	CB	07/2021
Checked		
ENG Appr.		
MFR Appr.		
QA		
Weight		

Sign Light #5751/850 LED 100

97 5/8" L | 24 1/2" Ext | 9" H | 93" Center to Center Arms
Acrylic Lens : White (-3) | Clear (-4) | Frosted (-5)

Size	Drawing No.	Rev
A	0001	A

Scale	CAD File	Sheet
		1 of 1

Revisions

Zone	Rev	Description	Date	Approved